Pilot Rock®
PARK · STREET · CAMP
SITE PRODUCTS

Riverview Series, Model B61 Embedded Mount 3, 4, and 6 Ft. Bench with Lumber Timbers

SPECIFICATION BULLETIN
#SPC-BC-077
REV. 08-19

Model B61/CN-4CO34 *Embedded Mount Bench with Green Powder Coat Frames, 4 Ft. long with Construction Heart Redwood 3" x 4" Timbers.*

- **Comfortable seat design may be accessed from either side**
- **Design offers extensions to make longer benches with additional armrests**
- **Wide curves at the corners of the frames also serve as comfortable armrests**
- **Sturdy, formed and welded steel frame construction**
- **Powder Coat frame finish**
- **Precision drilled Hardwood 3" x 4" Timbers**
- **Quality construction throughout**

AVAILABLE OPTIONS

3', 4', or 6' models
Choice of colors of Powder Coat Finish on steel frame components
Bench Extensions for 3' and 4' benches
Custom Lettering and Plaques available (call for details)

SPECIFICATIONS:

- **Model B61 Series** end frames are one-piece welded construction with frame to meet 2" nominal steel pipe size specifications (2-3/8" O.D.) with each corner to be formed on a nominal 6" centerline radius. Seat brackets are constructed of 3-1/8" x 2" x 7 ga. die-formed steel angle with holes to mount six 3" x 4" timbers.
- Bench is designed to be permanently anchored by embedding bench legs in concrete footings.
- **Model B61-3** is a nom. 3 ft. in length.
- **Model B61-4** is a nom. 4 ft. in length.
- **Model B61-6** is a nom. 6 ft. in length.
- **Standard:** Frames are finished in Black powder coat (indicated by "/CB" in model no., e.g. B61/**CB**-3CO34).
- **Standard:** Lumber is Construction Heart Redwood 3" x 4" nominal sized timbers (indicated by "CO" in model no., e.g. B61/CB-3**CO**34). All timbers are precision drilled for assembly and have all exposed edges removed to a 3/8" radius with a bullnose profile timber used on outside positions.
- All fasteners are provided for assembly.
- **Optional:** Color choices of powder coated steel frame components. For optional colors choices see Specification Bulletin #SPC-CO-001.
- Bench extensions of a matching design are available on 3 and 4 ft. bench models. For additional information please refer to Specification Bulletin #SPC-BC-079.

RJ Thomas Mfg. Co., Inc.
PO Box 946 • Cherokee, IA 51012-0946 • PH: 712-225-5115 • 800-762-5002 • FAX: 712-225-5796
E-mail: pilotrock@rjthomas.com • Web Site: http://www.pilotrock.com
© 2019 RJ Thomas Mfg. Co., Inc. PILOT ROCK® Park Products is a registered trademark of RJ Thomas Mfg. Co., Inc.

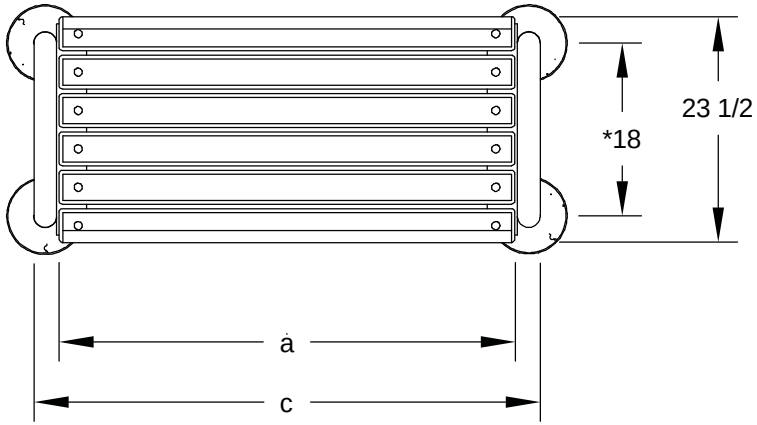

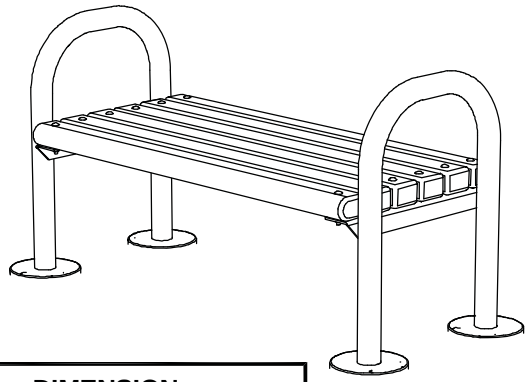

MODEL NUMBER	DIMENSION		
	a	*b	c
B61-3	35 1/2	38 3/8	40 3/4
B61-4	47 1/2	50 3/8	52 3/4
B61-6	71 1/2	74 3/8	76 3/4

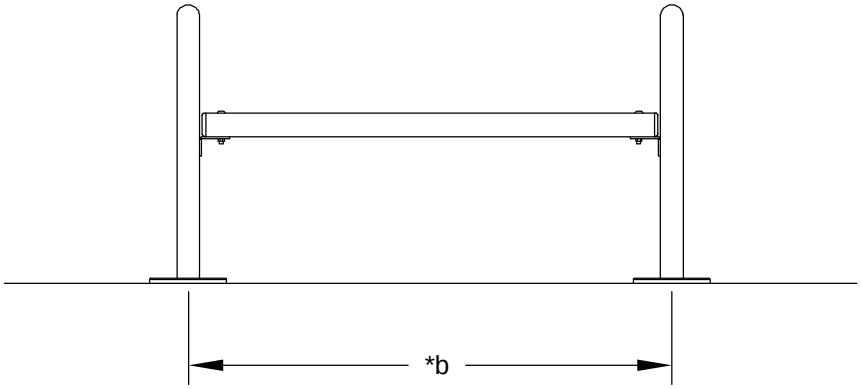

*CTR TO CTR
OF FRAME POSTS

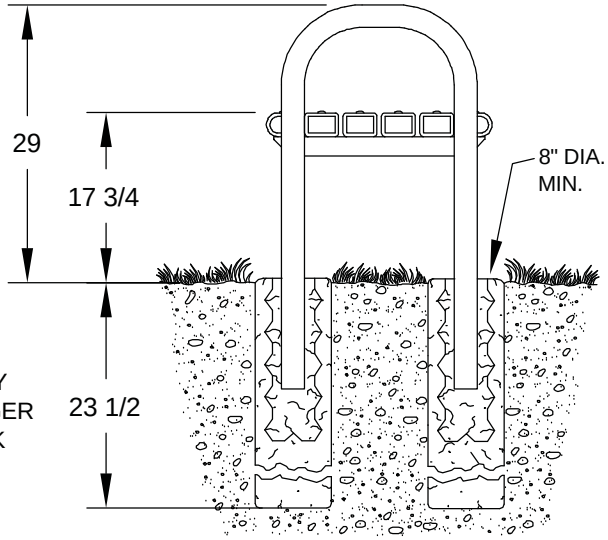

NOTE:
LOCAL SOIL
CONDITIONS MAY
REQUIRE A LARGER
FOOTING (CHECK
LOCAL CODES)

ALL DIMENSIONS IN INCHES

RJThomas Mfg. Co., Inc. P.O. Box 946 • Cherokee, IA 51012-0946	DRAWN BY WWM	TITLE RIVERVIEW SERIES MODEL B61 3, 4, AND 6 FOOT FLAT EMBEDDED MOUNT BENCH WITH 3" X 4" LUMBER TIMBERS	DATE 8-28-08 DWG. NO. AI-1558

Specification Bulletin SPC- BC-077